SAMSYS+

Innovative. Intelligent. Precise.

BAR LOADING AND UNLOADING SYSTEMS

A PROFITABLE INVESTMENT FOR EVERY SIZE OF COMPANY

www.samsys.eu

THE CORPORATE PHILOSOPHY

At SAMSYS, we are committed to manufacturing innovative products of the highest quality. Together with our partners, we provide innovations distinguished by their precision and cost effectiveness. Our approach is based on close cooperation with clients, which has ensured our long-term success as a company.

Our motto is: "Exceeding the customer's requirements and producing top-quality products. Serving satisfied clients of all sizes and in all branches of industry."

Jo Braun
CEO

Your employees will love working with Samsys machines.

EVEN LONGER LASTING QUALITY!

Development. Construction. Service. Trust in the SAMSYS complete solution.

- The quality management of our products guarantees the best operation at your company.
- Trained engineers and specialists are always ready to help.
- Continuous quality improvement and further development of our products.
- We offer regular trainings and further education with main focus on operation, efficiency and profitability of our products – also available at your place.

THE COMPANY

SAMSYS GmbH – The Pioneer in Short Bar Loaders and Feeders.

SAMSYS is a dynamic company, full of new ideas and high-quality products. Today's SAMSYS GmbH was originally founded by the Swiss company SAMSYS SA (then: SAMECA SA) and has extensive experience in the area of bar feeders and loading magazines.

SAMSYS products are known for their reliability. For this reason, SAMSYS is preferred by manufacturers of the highest quality precision-turned parts. Our customers demand a high degree of automation in their machinery as well as economically efficient production processes. SAMSYS bar feeders will increase your company's productivity, which will in turn lower your unit cost.

„We help making our customers more competitive!" , Jo Braun, CEO

SAMSYS+

SAMSYS SHORT BAR LOADERS AND FEEDERS - PRECISE AND POWERFUL

CERTIFIED SYSTEM INTEGRATOR OF

UNIVERSAL ROBOTS
Certified System Integrator

CERTIFIED PARTNER OF

OnRobot

OUR SERVICE-PARTNER

Alzeyer Werkzeugmaschinen Service GmbH

AWS

MULTI-3000

Fully electric short bar feeder with servo drive

The Multi-3000 short bar feeder impresses with its performance and high productivity.

6 good reasons to run short bars

L = 1240 bzw. 1640 mm / Ø 5 mm – Ø 55 / 65 / 80 / 102 mm

- Reduction of mass in movement.
- Material guiding in the spindle enables to utilise full lathe performances.
- Increase spindle life time.
- Easy material handling.
- No bar chamfering.
- Reduction in ambient noise.

The benefits of *MULTI-3000*

- A simple, precise and proven concept.
- Unique, fast and smooth reload cycle.
- Easiest operation, fast on change over.
- Polyvalent, reload your round and profiled bars; swiftly change to shaft work if required.
- Maintenance free, due to its 100% electronic control for reloading and feeding.
- Environmentally friendly.

You can download the brochure and all technical data sheets on our website: https://www.samsys.eu/en/download-center/

More options for the *MULTI-3000* :

Multi-3000*remove*

Electro-pneumatic controlled unloader

SamSpindle

The high-performance short bar feeder complement.

Samsys ProFeeder X

The intelligent way of automated supply of the CNC. **(Further information in our Robotic and Cobotic Brochure)**

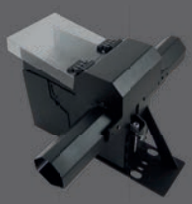

MiniShaft Loader

Enabling the loading of shafts from 40 -250 mm in length - Ø from 5 - 65 mm.

Samsys-MiJET

The parts cleaner. Air driven - no electricity needed

MULTI-3000SL

Short bar feeder

The Multi-3000SL short bar feeder impresses with its performance and high productivity.

The key advantages of Short bar feeders

L = 1240 mm / Ø 5 mm – 80 mm

- Using the Multi-3000SL allows to bridge large distances between machine cover and lathe spindle.
- Distances up to 400 mm will be closed without an additional extension. Even 800 mm are possible with an additional extension.
- This barfeeder is particularly important for machines with extended travels as well as for the lathes with sub spindle.

The benefits of *MULTI-3000SL*

- A simple, safe and efficient solution for bridging large distances between lathe cover and spindle end
- Unique, fast and smooth reload cycle
- Easiest operation, fast change over
- Polyvalent, reload your round and profiled bars; swiftly change to shaft work if required
- Maintenance free, due to its 100 % electronic control for reloading and feeding
- Environmentally friendly

You can download the brochure and all technical data sheets on our website: https://www.samsys.eu/en/download-center/

More options for the *MULTI-3000SL*:

Multi-3000*remove*

Electro-pneumatic controlled unloader

Samsys ProFeeder X

The intelligent way of automated supply of the CNC. **(Further information in our Robotic and Cobotic Brochure)**

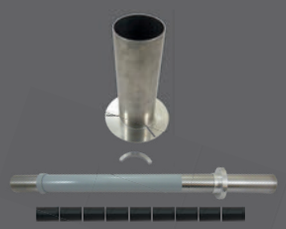

Spindle liner

Spindle liner for draw tubes with a diameter from 38 mm to 100 mm

Samsys-MiJET

The parts cleaner. Air driven - no electricity needed

Samsys-Smart

The Smart short bar feeder impresses with its performance across the board.

Short bar feeder with servo drive

L = 1200 mm / Ø 5 mm – Ø 65 mm

The benefits:

- No special requirements or restrictions on material straightness.
- Material rotates within machining area and spindle length of lathe.
- Lathe spindle speed can be maximized.
- Material can be round or hexagonal.
- Material length can be uniform or random.
- Easy operating and maintaining.
- Low space requirement.
- Low acquisition costs.

You can download the brochure and all technical data sheets on our website: https://www.samsys.eu/en/download-center/

Sam-Spindle

The High-Speed Extension

SamSpindle is the most powerful supplement for short bar feeders and allows you to feed bars up to a length of 1.6 meters -even with short headstock.

L = 275 - 950 mm / Ø 15 mm – Ø 65 mm

A safe, simple and clean solution!

SamSpindle operates oil-free.

There is no mechanical connection with the lathe. The number of moving parts is kept to a minimum, i. e.

- The rotating bar
- The guiding bushes
- The interior cage of the ball bearings

The facts:

- The bar rotates independently in the axis of the spindle.
- The masses in movement are reduced to a bare minimum.
- No friction; the moving parts rotate at a synchronous speed.
- The vibrations are absorbed by the guiding rings and the anti-vibration coatings.
- The whole interior of the safety cartridge is generously dimensioned.

Sam-Spindle

The ideal supplement for the Multi-3000.

MULTI-3000remove

Electro-pneumatic controlled unloader

The *MULTI-3000remove* is the perfect supplement for the *MULTI-3000* or the *MULTI-3000SL*.

Adjustable spindle height according to lathe spindle

round bars Ø 10 to 65 mm | Profile material 10 to 65 mm (circumscribed circle)
bar length 150 up to 1000 mm, other length on request.

The key advantages of the Multi-3000*remove*

- Electro-pneumatic controlled unloader
- Unloading material from the right side
- Storage on slide (Standard)
- Other storage types on request
- Application range: medium to large lot sizes

Always a gentle way of unloading the work pieces through the machine sub spindle by gripper, collet or unloading tube.

You can download the brochure and all technical data sheets on our website: https://www.samsys.eu/en/download-center/

More options for the *MULTI-3000remove*:

Multi-3000
Short bar feeder

Multi-3000SL
Short bar feeder

Samsys-Smart
Short bar feeder

Samsys-MiJET
The parts cleaner. Air driven - no electricity needed

AutoSam 3.26

Hydrodynamic automatic bar feeder

AutoSam 3.26 is an automatic bar feeder with hydrodynamic bar guiding for your small, medium and large series - Ideal for connection to sliding head (Swiss-type).

Merkmale:

L = 2200, 2700, 3200, 3700 mm / Ø 3 – Ø 26 mm

- Hydraulic bar guiding ensures silent bar processing.
- Various parameter settings, alarm detection and function display.
- Driven by Mitsubishi AC servo motor.
- High-density steel structure ensuring rigidity and durability.
- The mechanical synchronization device allows the use of sliding headstock of CNC lathe and ensures fast and stable loading.
- Quick-change guide channel for easy and convenient changing.

AutoSam 3.51

Hydrodynamic automatic bar feeder

AutoSam 3.51 an automatic bar feeder with hydrodynamic bar guiding for your medium and large series.

Merkmale:

L = 3200 mm / Ø 5 mm – Ø 51 mm

- Hydraulic bar guiding ensures silent bar processing.
- Various parameter settings, alarm detection and function display.
- Driven by Mitsubishi AC servo motor.
- High-density steel structure ensuring rigidity and durability.
- The mechanical synchronization device allows the use of sliding headstock of CNC lathe and ensures fast and stable loading.
- Quick-change guide channel for easy and convenient changing.

Spindle liner

for lathe spindle

Spindle liner for draw tubes with a diameter from 38 mm to 100 mm

The material in the spindle, that is to be fed, is usually much smaller than the lathe`s spindle bore. Especially with loading magazines for short bars, a spindle liner is required to ensure a smooth reloading. In addition, this also achieves a more efficient guiding of the loaded tubes and bars.

- Rapid mounting and dismounting
- Simple adjustment of the bar diameter
- Enabling the loading of bars of 1 meter length for short spindles (800 mm)
- Flexible usability for round, hexagonal, square, and special material

Mini Shaft Loader

The ideal supplement for the Multi-3000

Enabling the loading of shafts from 40 – 250 mm in length.*Diameter range of 5 - 65mm.

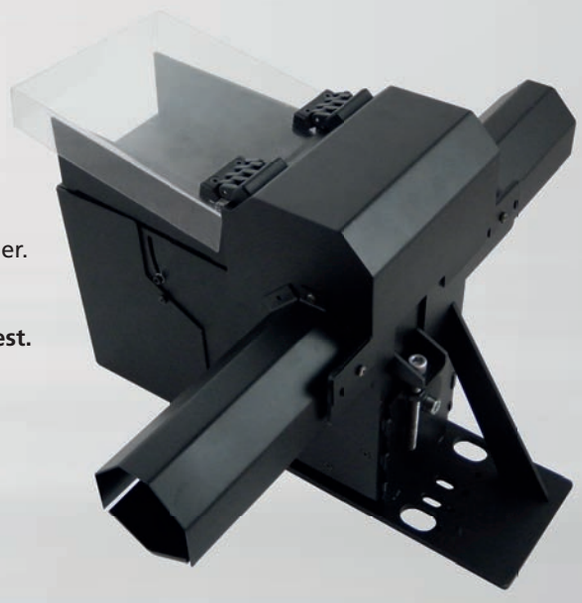

- Simple operation
- Quick mounting and dismounting
- Shorter loading times in comparison to conventional bar feeders.
- Device is set up and controlled by the control panel of the bar feeder.
- Installation of the Mini Shaft Loader is only realized via a plug

*** max. standard length 140 mm. Other lengths are available on request.**

No impact on the bar feeder

- Unique loading cycle by rotary movement.
- Accurate bar selection.
- The selected bar is gently placed on the loading channel.

MULTI-profile loading channel

- Feeding of round and hexagon bars without change of channel.
- Special profiles on request.

Universal Lifter

To extend the MULTI 3000 to the bar feeder for special profiles, the Uni-erector can be mounted optionally. It enables the erection of rectangular profiles and special profiles for further transport to connected machine tools.

Features:

- Enables the reloading of rectangular profiles and special materials.
- Extremely short changeover times.
- The normal use of the loading magazine without erector is still possible.
- Selection and deselection of the Uni-erector is simply done via parameters
- Can be retrofitted to almost all Multi 3000 models.*

*Depending on existing accessories

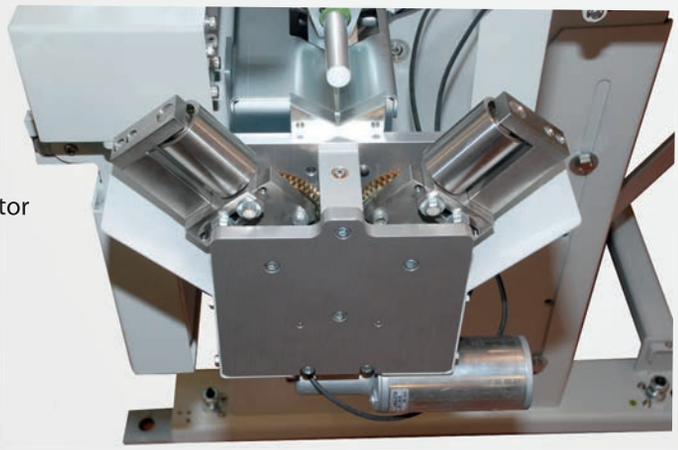

We are happy to advise and inform you about our products!

„MiJET units, powered by air, are used near CNC machines or inspection stations to clean oily residue and chips from parts. They capture that residue with vacuum into a container for recycling."

MiJET®

„MIJET protects the environment and the health of your employees."
Jo Braun, CEO, Samsys GmbH

OPTIMAL FOR ISO 14001 CERTIFIED COMPANIES

ISO 14001

SAMSYS GmbH - Service & Support

Spare Parts

Our products don't require any special maintenance. Nevertheless, if you have any specific technical problems or if you need the appropriate replacement part, our competent service team can quickly help you via telephone or e-mail. This applies both to Samsys and Sameca products.

Samsys offers a variety of spare and wear parts, which can be delivered by our logistics partners just in time.

Customer Service

Our telephone customer service is available weekdays from 8:00am - 05:00pm available for free.
For questions, changing of requests, appointments or emergencies, we are here for you.

This applies both to SAMSYS and for SAMECA products.

Training & Further Education

We are offering efficient trainings, which are targeted at operation, efficiency and profitability of our products - also at your site. Learn more about the options for bar machining, trends and possible solutions for your specific needs.

Our professional training team is at your disposal for this purpose.

For more information on our service & support services, please contact:

SAMSYS GmbH | Obere Schanzenstr. 1-7 | 55232 Alzey / GERMANY
Tel.: +49 (0) 6731 / 99 89 95-0 | Fax: +49 (0) 6731 / 548 796 4

or

Alzeyer Werkzeugmaschinen Service GmbH | Obere Schanzenstr. 1-7 | 55232 Alzey / GERMANY
Tel.: +49 (0) 6731/ 45 35 0 | Fax: +49 (0) 6731 /45 33 6

SAMSYS

Innovative. Intelligent. Precise.

SAMSYS GmbH
Obere Schanzenstr. 1-7 | 55232 Alzey / GERMANY
Tel.: +49 (0) 6731 / 99 89 95-0 | Fax: +49 (0) 6731 / 548 796 4

E-Mail: contact@samsys.eu | **www.samsys.eu**

SAMSYS Loading and Unloading Systems

The brochure and the technical data sheets can be downloaded from our website at:

https://www.samsys.eu/en/download-center/

© SAMSYS 08/2022/en_Aufl. 3 | www.impuls-Kreativagentur.de